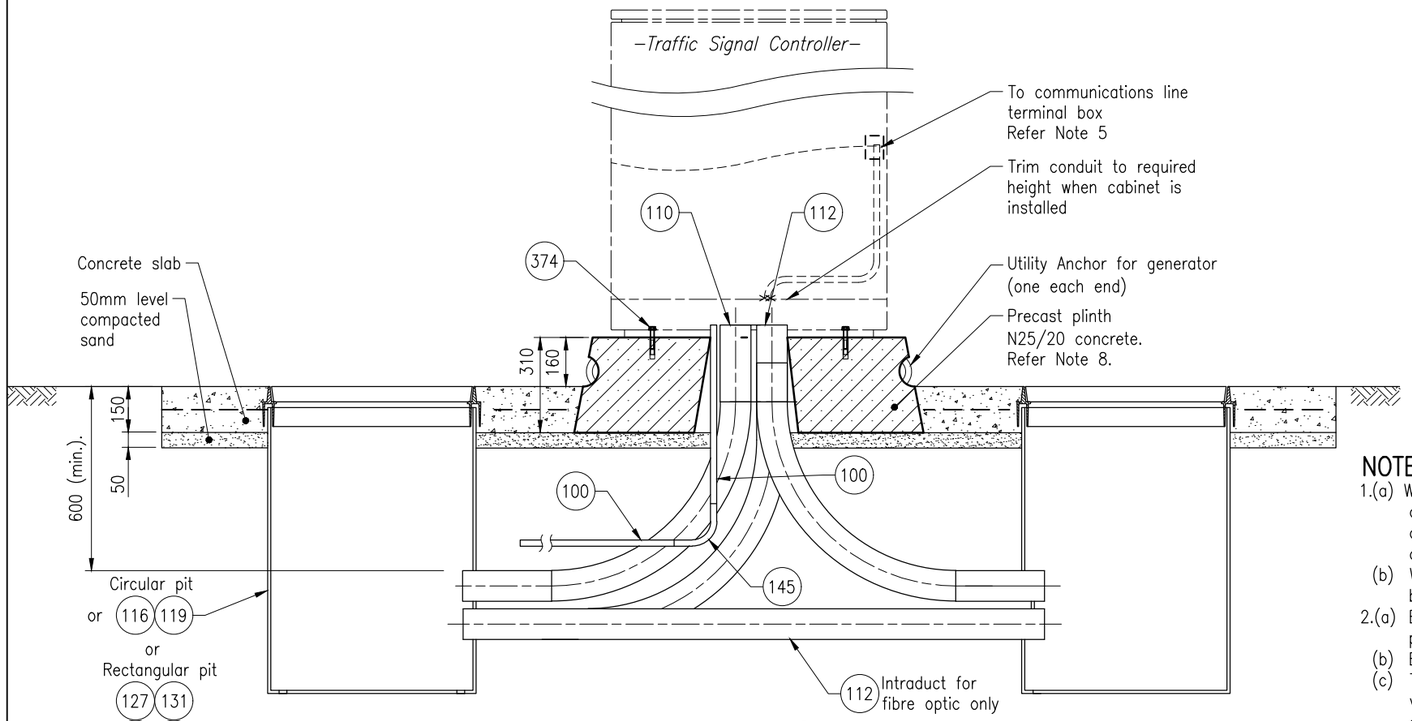

SECTION A – For plan view Refer Detail 2

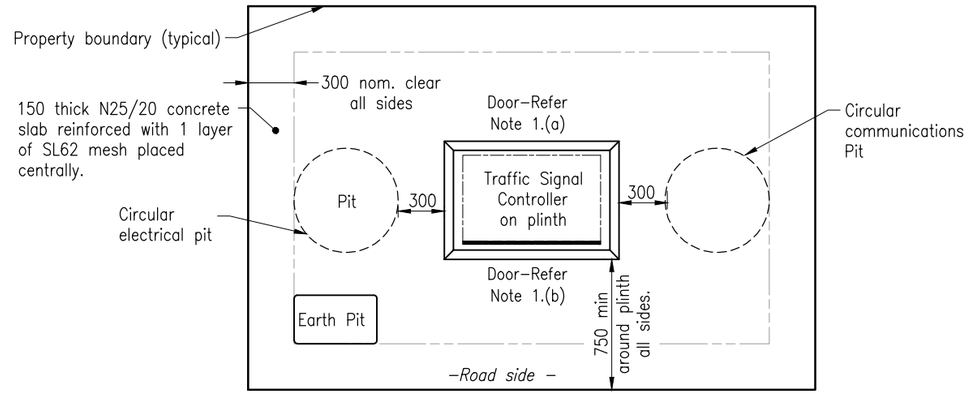

DETAIL 2 – TYPICAL SLAB LAYOUT

NOTES:

1.(a) Where possible, Controllers shall be installed at least 1m away from the property boundary to ensure the door can open freely, allow safe egress, and enable the door to face away from the roadway.
(b) Where the Controller is installed adjacent to the property boundary, the door shall open facing the roadway.
2.(a) Ensure there are no underground services in the vicinity prior to installing earth electrode.
(b) Earth pits shall be minimum of 3m apart.
(c) The earth electrode must be driven no less than 1300mm vertically into the ground, leaving a minimum 150mm exposed length of the electrode in the base of the pit. 426 and 427 shall be approved only.
(d) Earth rods are not to be cut under any circumstances. In difficult soils, dig out the appropriate P3 pit size, auger a 75mm hole vertically to 1300mm, install the earth electrode in the centre of the hole, fill the auger hole with LSI RESLO or equivalent, then install the pit over the earth electrode.
(e) Only one earth electrode connected to one main earth conductor permitted in one earth pit.
(f) For existing no.7 pit and pits of greater depth, a 1.8m earth stake is to be used, where it is not viable to install a separate adjacent dedicated earth P3 pit with a new 1.5m earth stake.
(g) Attach a permanent label to the connection of the main earthing conductor to the earth electrode stating: "WARNING: MAIN ELECTRICAL EARTHING CONDUCTOR – DO NOT DISCONNECT".
3. Attach a permanent label in the switchboard stating "EARTH ELECTRODE IN ADJACENT EARTH PIT".
4. Install draw rope in communications conduit.
5. Terminal box when in position should permit connection of 20mm rigid conduit through 130 dia. hole in base of Controller.
6. Pits may be located differently in relation to Controller to suit Mains Power and Communications requirements.
7. All exposed concrete edges to have a 15mm chamfer or fillet.
8. For installation in flood prone areas, height of precast plinth may be higher to suit; or, an extension plinth from a registered supplier, as per MRTS72: 'Manufacture of Precast Concrete Elements' may be used with the approval of the Principal.
9. If the extended plinth is higher than 310mm, stairs shall be provided to AS 1657: 'Fixed Platforms, Walkways, Stairways and Ladders – Design, Construction and Installation',
10. Dimensions are in millimetres unless shown otherwise.

ASSOCIATED DEPARTMENTAL DOCUMENTS:
Standard Drawings
Specifications

REFERENCED DOCUMENTS:
Departmental Standard Drawings:
1627 Road Lighting – Switchboard Top Mounted
1699 Traffic Signals/Road Lighting/ITS – Parts List indicated as XXX
1709 Traffic Signals/ITS – Uninterrupted Power Supply (UPS) – Base Installation Details
1710 Traffic Signals/ITS – Uninterrupted Power Supply (UPS) – Wiring Schematic

Departmental Specifications:
MRTS72 Manufacture of Precast Concrete Elements
MRTS92 Traffic Signal and Road Lighting Footings
MRTS93 Traffic Signals

Australian Standards:
AS/NZS 3000 Electrical Installations (Wiring Rules)
AS 1657 Fixed Platforms, Walkways, Stairways and Ladders – Design, Construction and Installation

Departmental Specifications:
MRTS70 Concrete
MRTS72 Manufacture of Precast Concrete Elements

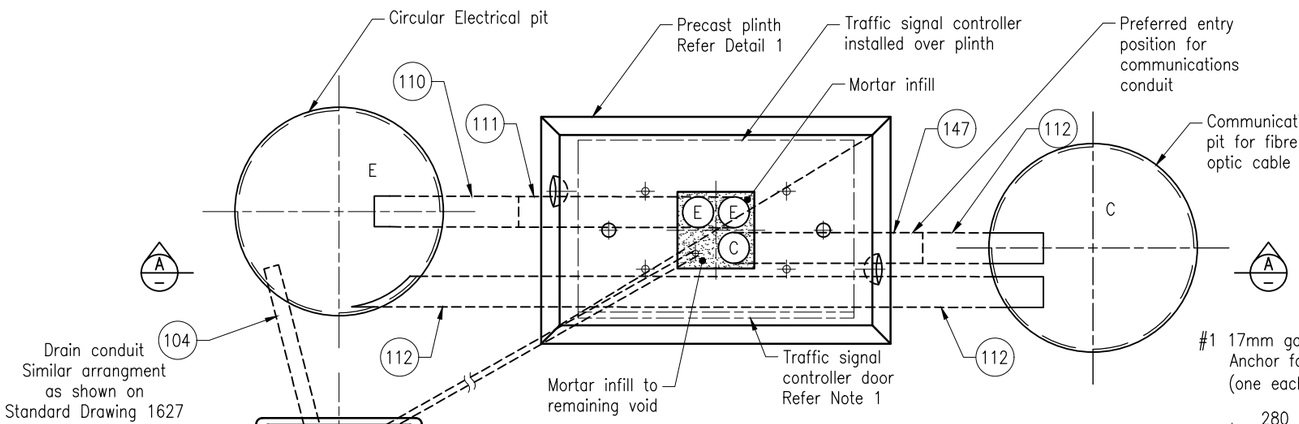

INSTALLATION LAYOUT PLAN

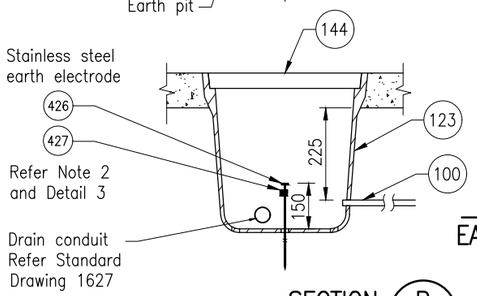

SECTION B – EARTH PIT ELEVATION

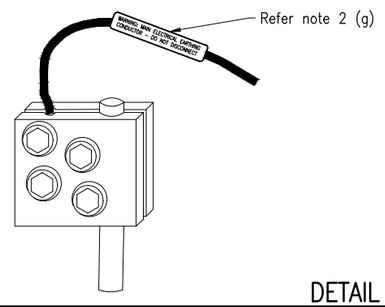

DETAIL 3 – EARTH STAKE, CABLE & BLOCK ASSEMBLY N.T.S

INSTALLATION OF CONDUITS AND PITS IS THE RESPONSIBILITY OF THE LICENSED ELECTRICAL CONTRACTOR

#1 17mm galvanised Utility Anchor for generator (one each end)

#2 Void in plinth for conduits 250 x 250 at top. Transition evenly to 340 x 340 at base.

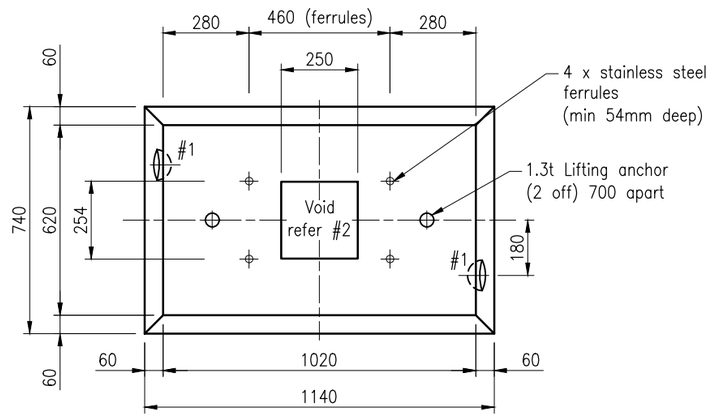

DETAIL 1 – PRECAST CONCRETE PLINTH

Department of Transport and Main Roads	
TRAFFIC SIGNALS	
TRAFFIC SIGNAL CONTROLLER BASE INSTALLATION DETAILS	A3 Not to Scale
	Standard Drawing No 1423
	Date 7/2024

© The State of Queensland (Department of Transport and Main Roads) 2024 https://creativecommons.org/licenses/by/4.0/