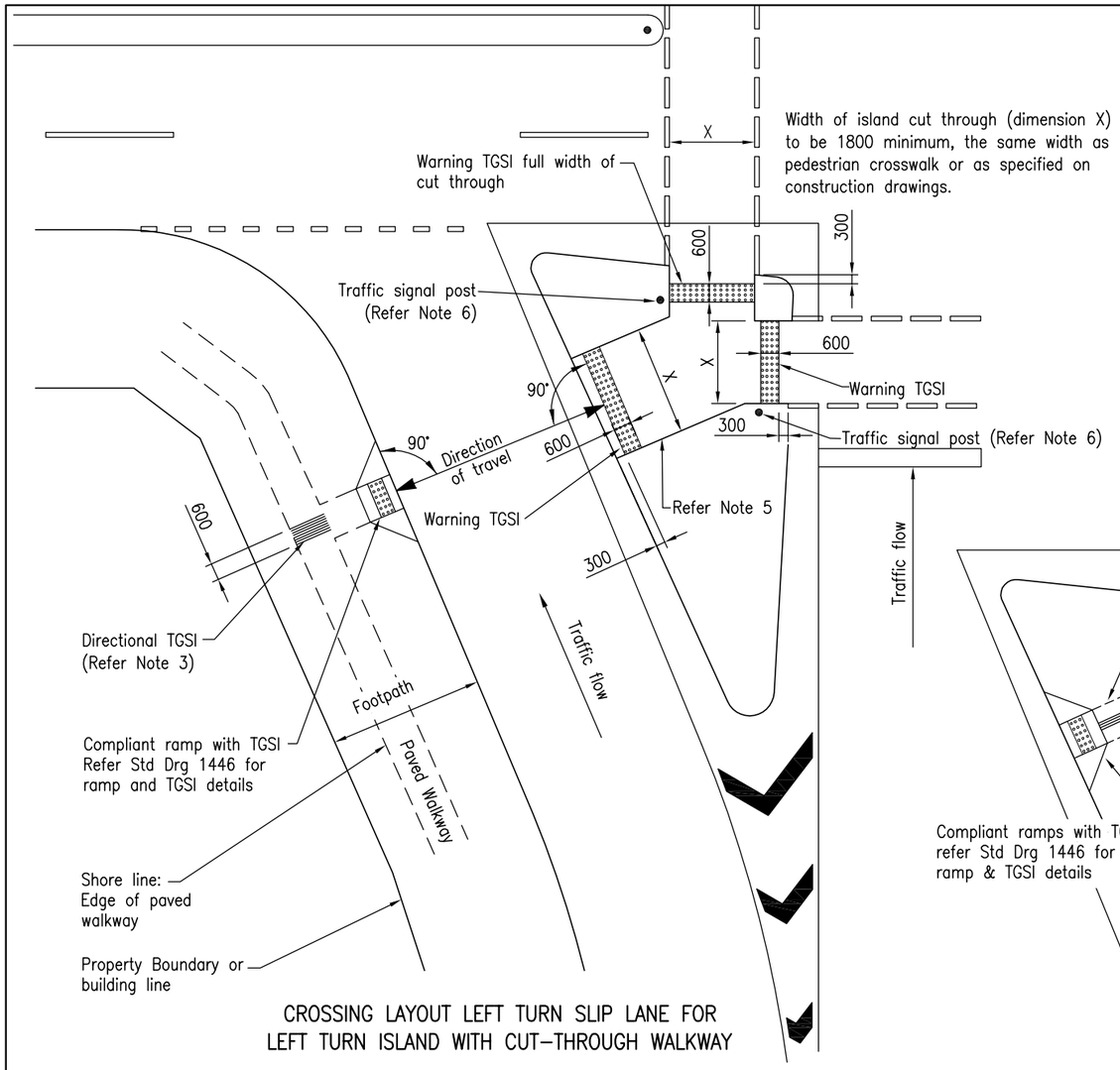

CROSSING LAYOUT LEFT TURN SLIP LANE FOR LEFT TURN ISLAND WITH CUT–THROUGH WALKWAY

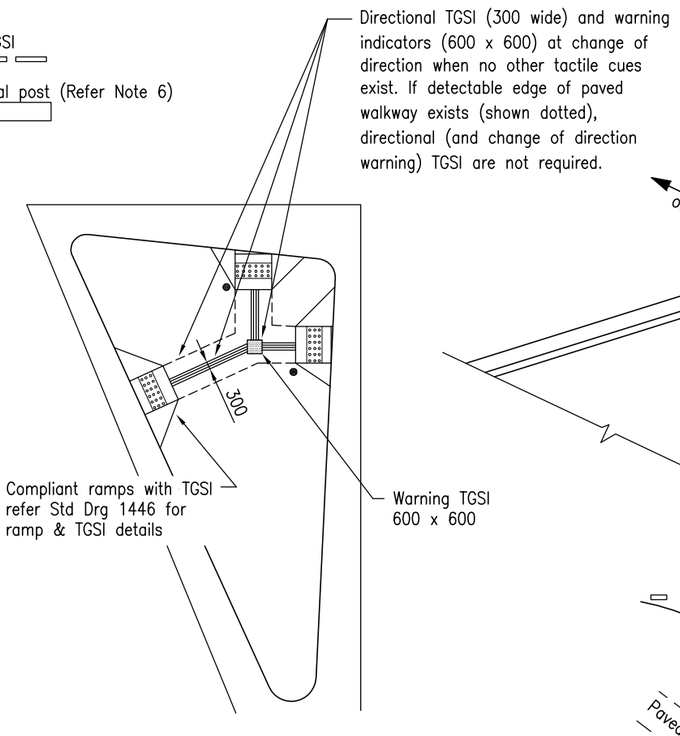

ALTERNATIVE TREATMENT ACROSS LEFT TURN ISLAND WITH KERB RAMPS AND DIRECTIONAL TGSI OR WALKWAY EDGE

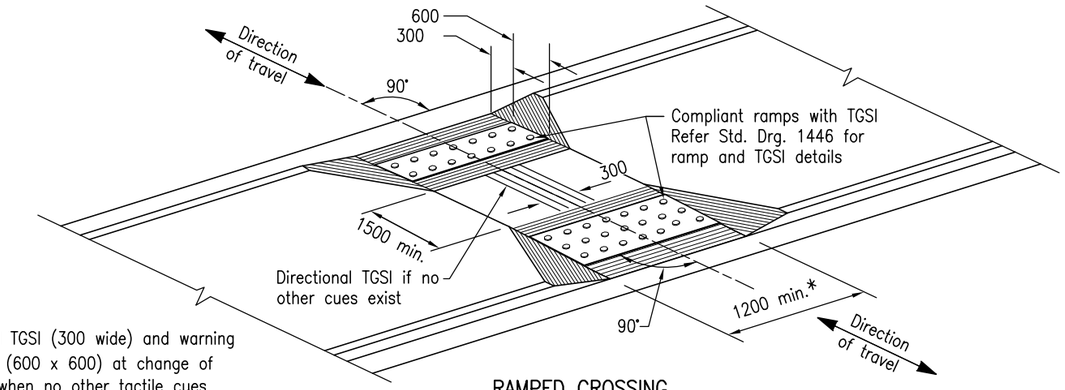

RAMPED CROSSING

(Compliant kerb ramps installed)

*Kerb ramps to be 1200 minimum wide, cut–through to be 3000 minimum or the same width pedestrian crossing or as specified on construction drawings.

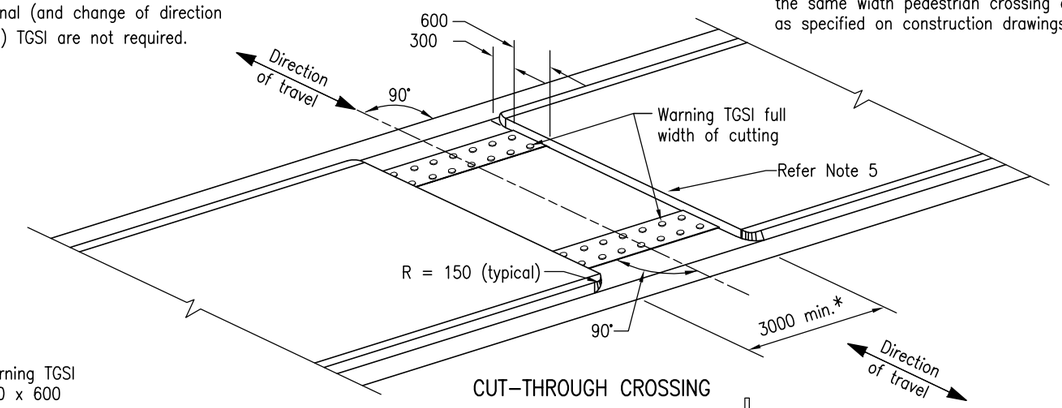

CUT–THROUGH CROSSING

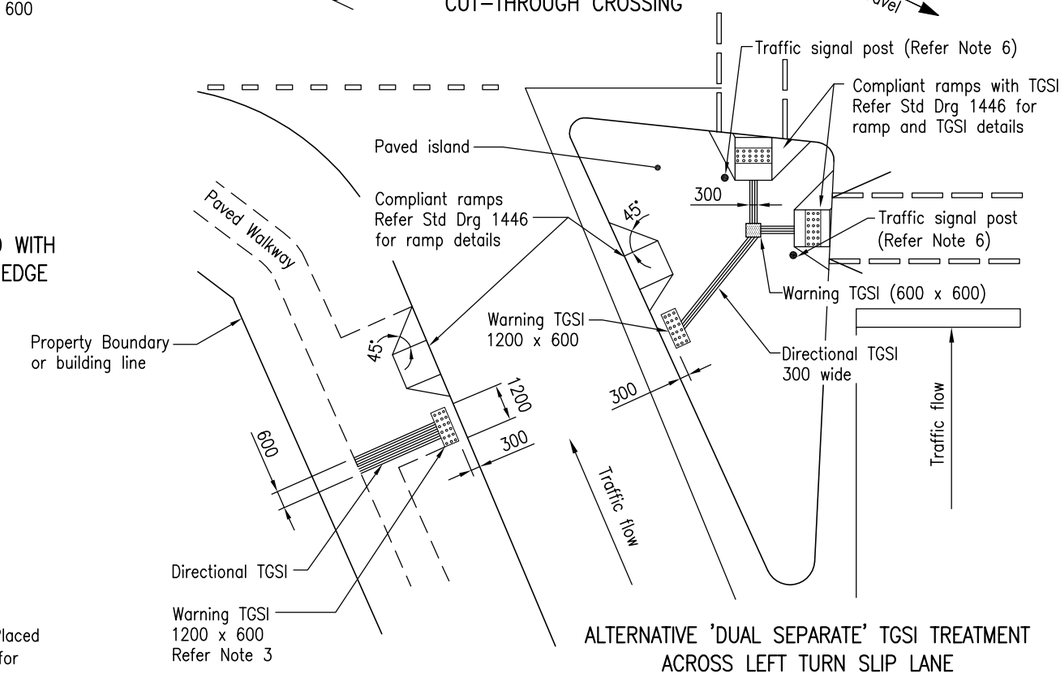

ALTERNATIVE 'DUAL SEPARATE' TGSI TREATMENT ACROSS LEFT TURN SLIP LANE

NOTES:

1. RAMP details and notes as for Kerb Ramps on Standard Drawing 1446.
2. TACTILE ground surface indicators (TGSI) shall be in accordance with AS/NZS 1428.4.
3. DIRECTIONAL TGSI to continue to top of kerb ramp unless edge of paved walkway provides consistent detectable cue for pedestrians with a vision impairment.
4. If a WARNING TGSI treatment is located on one side of a crossing, there must be a warning TGSI treatment on the other side of the crossing, aligned with each other.
5. CUT–THROUGH in islands to be constructed so the cut is parallel to the direction of travel.
6. For location traffic signals posts, and location and orientation of pedestrian push button assemblies, refer to MUTCD Part 14. The push button post should also be located on a level surface and the push button assembly located within the zone of common reach (refer AS 1428.2 i.e. be no more than 400mm outside the edge of a pathway or kerb ramp).
7. DIMENSIONS are in millimetres unless shown otherwise.

ASSOCIATED DOCUMENTS:
Main Roads Manual Specifications and Technical Standards Manual
Main Roads Standard Drawings Roads manual

REFERENCED DOCUMENTS:
Standard Drawings:
1033 Kerb and Channel – Kerbs, Channels and Ramped Vehicular Crossing
1446 Kerb Ramp – Ramped Kerb Crossing

Standard Specifications:
MRTS03 Drainage, Retaining Structures and Protective Treatments

Australian Standards:
AS 2876 Concrete kerbs and channels (gutters) – Manually or Machine Placed
AS 1428.1 Design for access and mobility – Part 1 General requirements for access – New building work
AS/NZS 1428.4 Design for access and mobility – Part 4 Tactile indicators

Refer drawings KRG1 and KRG2 for TGSI application examples and guidelines on their use and placement.

MEDIAN AND ISLAND CROSSING	Queensland Government Department of Transport and Main Roads	
RAMPED AND CUT–THROUGH TREATMENT FOR PEDESTRIAN FACILITIES	A3 Not to Scale	Standard Drawing No 1447 Date 10/09
	A B	