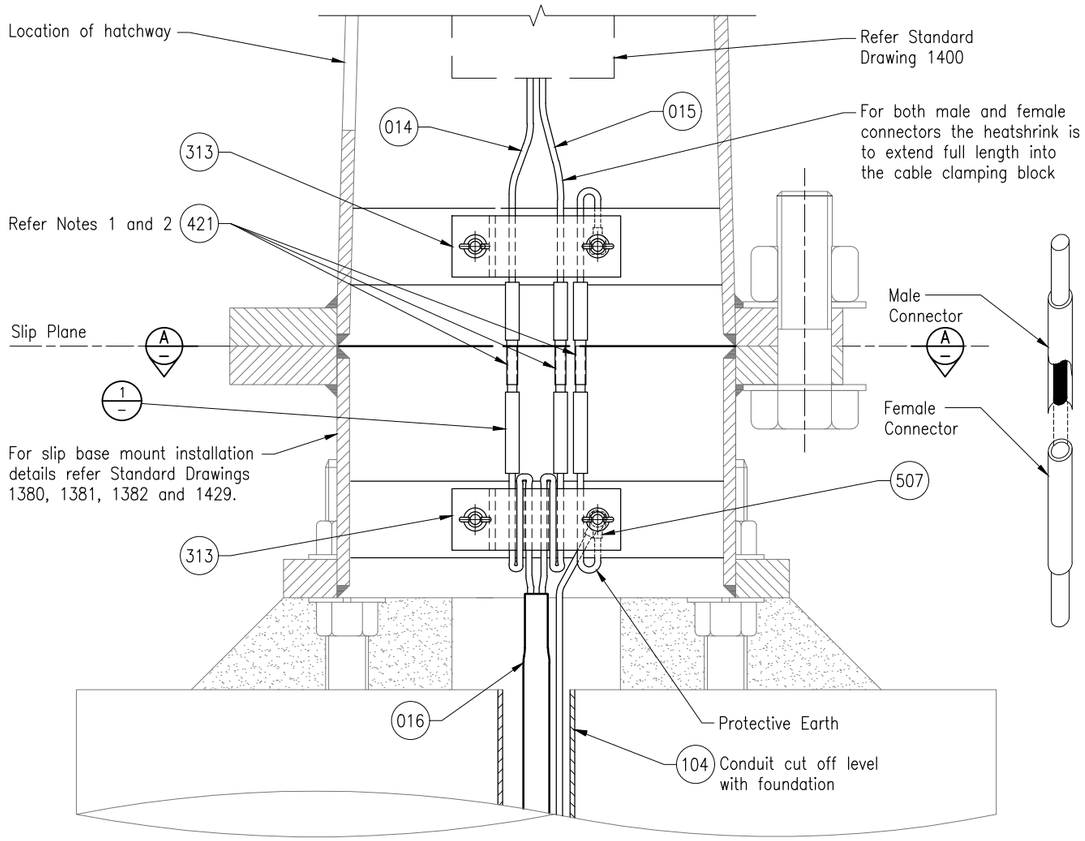

SECTIONAL FRONT VIEW

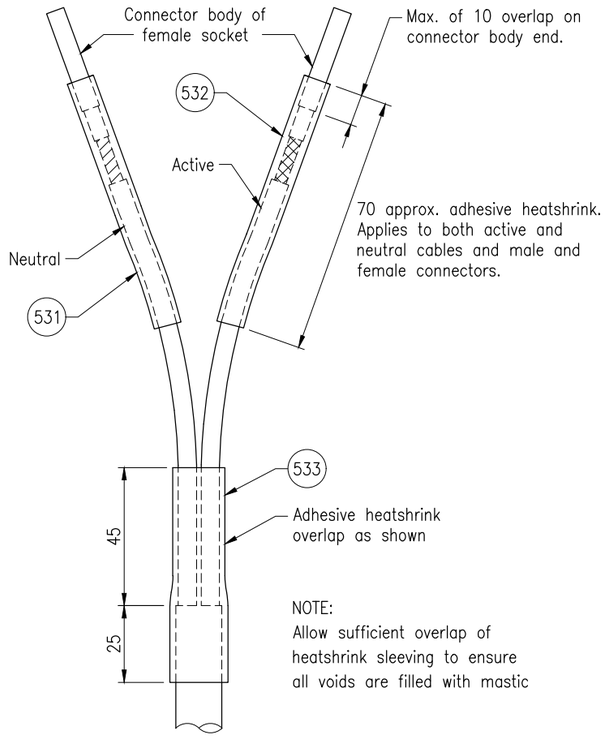

DETAIL 1
CONNECTOR INSULATION

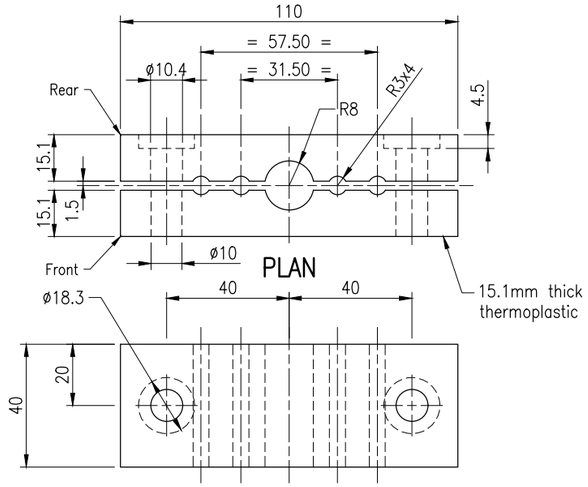

ELEVATION

CABLE CLAMPING BLOCK 313

NOTES:

1. Slip base connectors to be orientated so that the shrouded male plug is to the top.
2. End of female socket to be located flush with the slip plane.
3. No slack to be left in cables.
4. Earth conductor lug to be positioned and fixed securely between the clamping bolt head and cable clamping bracket.
5. M8 x 45 setscrew, washers, nuts and wing nuts are supplied with the slip base pole and slip base mount.
6. Dimensions are in millimetres unless shown otherwise.

ASSOCIATED DEPARTMENTAL DOCUMENTS:
Standard Drawings
Specifications

REFERENCED DOCUMENTS:
Departmental Standard Drawings:
1380 Road Lighting – Slip Base Pole and Footing Installation Details for No Crossfall
1381 Road Lighting – Slip Base Pole and Footing Installation Details for Crossfalls up to and Including 1:6
1382 Road Lighting – Slip Base Pole Installation Details for Crossfalls Greater than 1:6 up to and Including 1:3
1400 Road Lighting – Slip Base Pole Wiring Details
1429 Road Lighting – Slip Base Pole and Footing Installation Details for Crossfalls Greater than 1:6 up to and Including 1:3 Using Concrete Step Tread
1699 Traffic Signals/Road Lighting/ITS – Parts List

Departmental Specifications:
MRTS256 Power Cables

Australian Standards:
AS/NZS 3000 Electrical Installations (Wiring Rules)

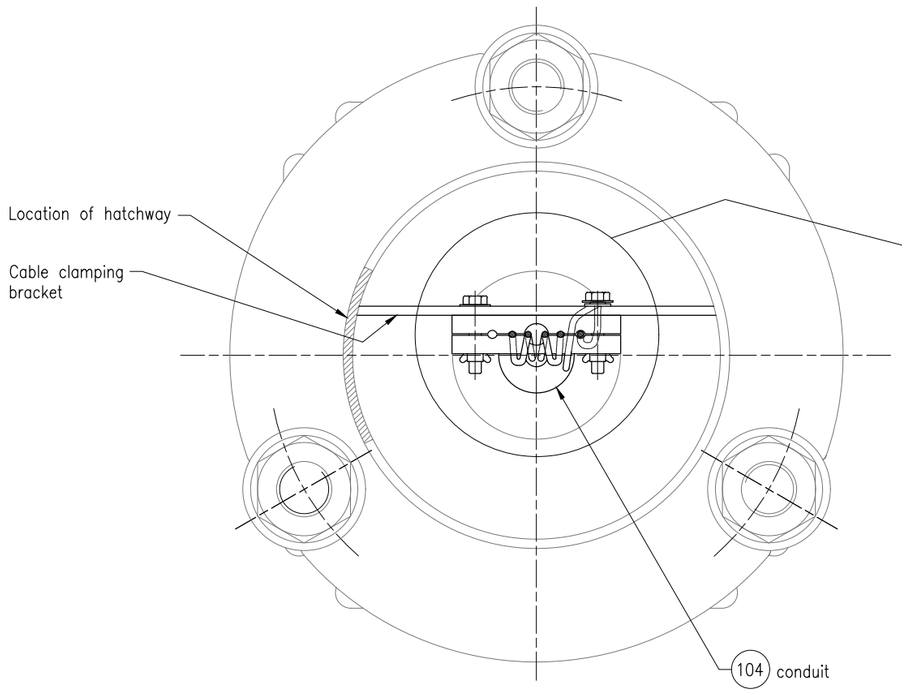

SECTIONAL PLAN VIEW A–A

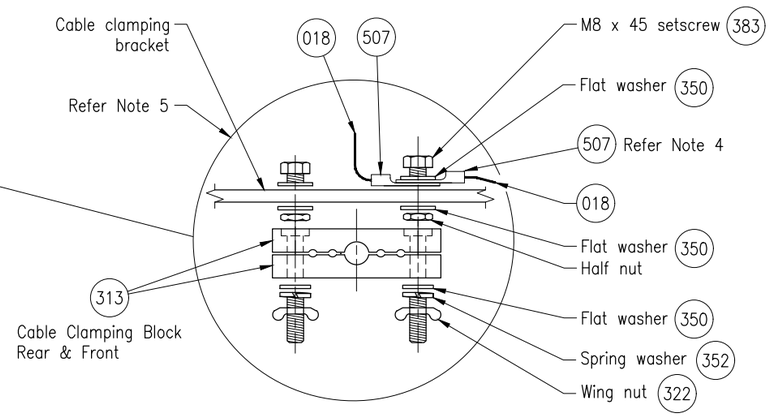

EXPLODED SECTION
CABLE CLAMPING BLOCK

Department of Transport and Main Roads		
ROAD LIGHTING		
SLIP BASE POLE MALE/FEMALE CONNECTORS INSTALLATION DETAILS	A3 Not to Scale	Standard Drawing No 1389 Date 2/2024

© The State of Queensland (Department of Transport and Main Roads) 2024 https://creativecommons.org/licenses/by/4.0/

C D E F G H I