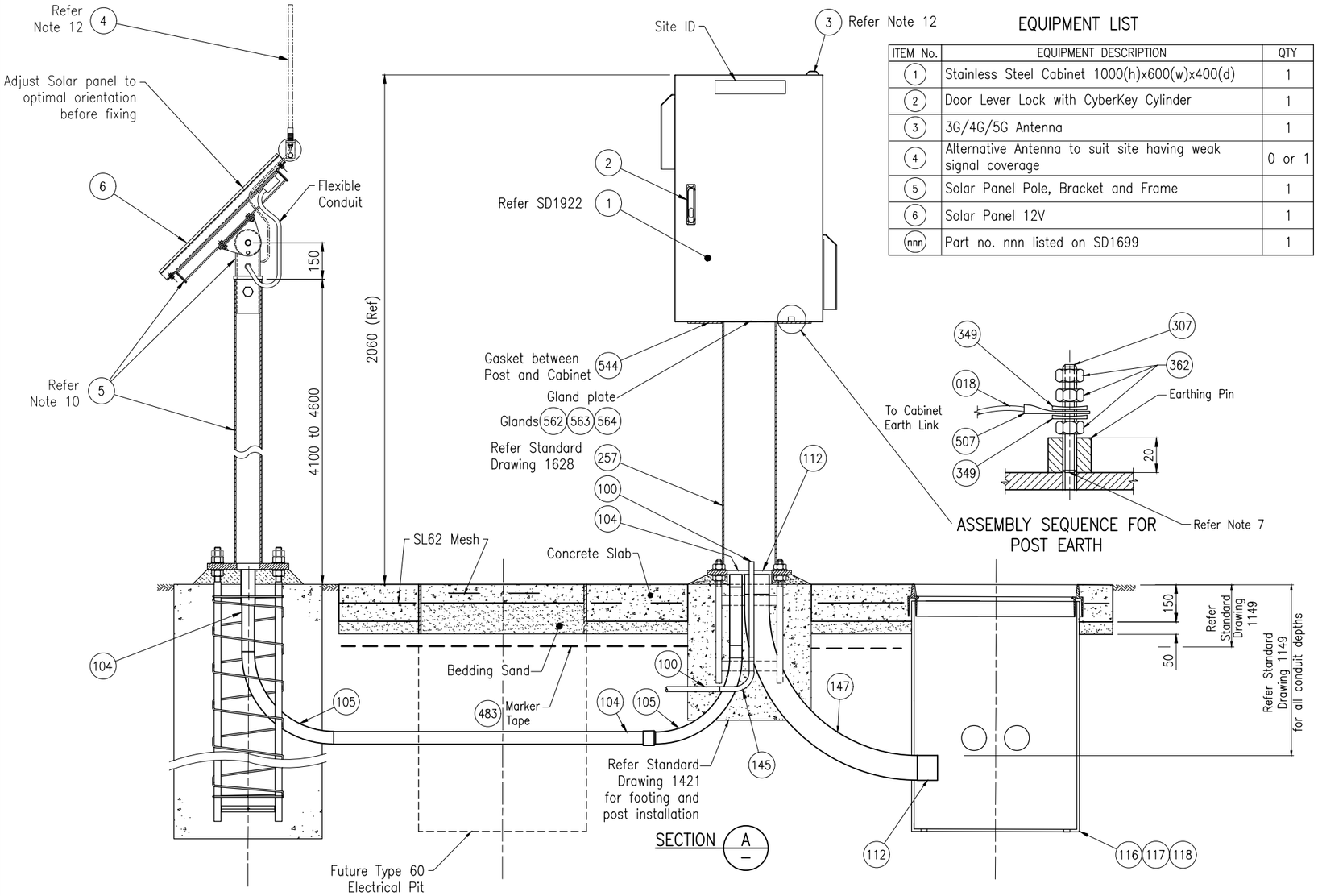

EQUIPMENT LIST

ITEM No.	EQUIPMENT DESCRIPTION	QTY
1	Stainless Steel Cabinet 1000(h)x600(w)x400(d)	1
2	Door Lever Lock with CyberKey Cylinder	1
3	3G/4G/5G Antenna	1
4	Alternative Antenna to suit site having weak signal coverage	0 or 1
5	Solar Panel Pole, Bracket and Frame	1
6	Solar Panel 12V	1
nnn	Part no. nnn listed on SD1699	1

ASSEMBLY SEQUENCE FOR POST EARTH

NOTES:

1. This drawing is a conceptual arrangement of a typical vehicle classifier cabinet installation. Exact arrangement will vary from project to project.
2. Pole, footing, brackets, and associated steelwork for solar panel installation shall be RPEQ certified by qualified engineers of appropriate disciplines.
3. Contact Engineering and Technology / Structures team for approval of structural components and installations.
4. For determination of sensor placement at vehicle classification site, refer to Traffic and Road Use Management Manual Vol 4 Part 5.
5. For determination of cabinet placement in relation to requirement of clear zones for fixed roadside objects, refer to TMR Road Planning and Design Manual – Edition 2: Volume 3, Supplement to Austroads Guide to Road Design Part 6: Roadside Design, Safety and Barriers.
6. Ensure there are no underground services in vicinity prior to installation.
7. Approximately 20mm length of booker rod must be screwed into the switchboard post earthing pin.
8. Pits may be located differently to suit future mains power and communications requirements.
9. Refer to relevant notes in SD1679 for the construction of earth pit and installation of earth electrode.
10. The maximum design parameters for solar panel installation (pole height, panel dimensions and weight) shall be as per MRTS97.
11. To install Type 60 electrical pit in future, contractor shall remove the concrete inside the formatube circle.
12. Antenna to be external to cabinet. If alternative antenna is used in lieu of low profile antenna, then low loss coax cable shall be considered.
13. Refer Standard Drawing 1699 for part details.
14. Dimensions are in millimetres (mm) unless shown otherwise.

ASSOCIATED DEPARTMENTAL DOCUMENTS:
Standard Drawings
Specifications

REFERENCED DOCUMENTS:
Departmental Standard Drawings:
1149 Traffic Signals/Road Lighting/ITS – Installation of Underground Electrical and Communications Conduit
1314 Traffic Signals/Road Lighting – Cable Jointing Pit Drainage Details
1396 Traffic Signals/Road Lighting – Joint Use Traffic Signal and Road Lighting Pole and Footing Installation Details
1415 Traffic Signals/Road Lighting – Circular Cable Jointing Pit Type 60 and 100
1416 Traffic Signals/Road Lighting – Collar for Circular Cable Jointing Pit
1421 Traffic Signals – Traffic Signals Post and Footing Installation Details
1440 Traffic Signals/Road Lighting – Cable Jointing Pit Rectangular Concrete Surround
1627 Road Lighting – Switchboard Top Mounted
1628 Road Lighting – Post-top Mounted Switchboard
1635 Traffic Signals – Traffic Signal Upper Mounting Assembly and Split Shell Assembly
1679 ITS – Telecommunications Field Cabinet Base Installation Details
1699 Traffic Signals/Road Lighting/ITS – Parts List
1922 ITS – Vehicle Classifier Cabinet Details – Solar Powered

Departmental Specifications:
MRTS70 Concrete
MRTS91 Conduit & Pits
MRTS97 Mounting Structures for Roadside Equipment
MRTS200 General Requirements for Intelligent Transport Systems (ITS) Infrastructure
MRTS201 General Equipment Requirements
MRTS207 Traffic Survey Foundation Equipment
MRTS251 Traffic Counter/Classifier
MRTS263 Standalone Solar (PV) Power Systems

Departmental Manuals:
Traffic and Road Use Management Manual Vol 4 Part 5
Road Planning and Design Manual – Edition 2: Vol 3

Australian Standards:
AS/NZS 3000 Electrical Installations (Wiring Rules)

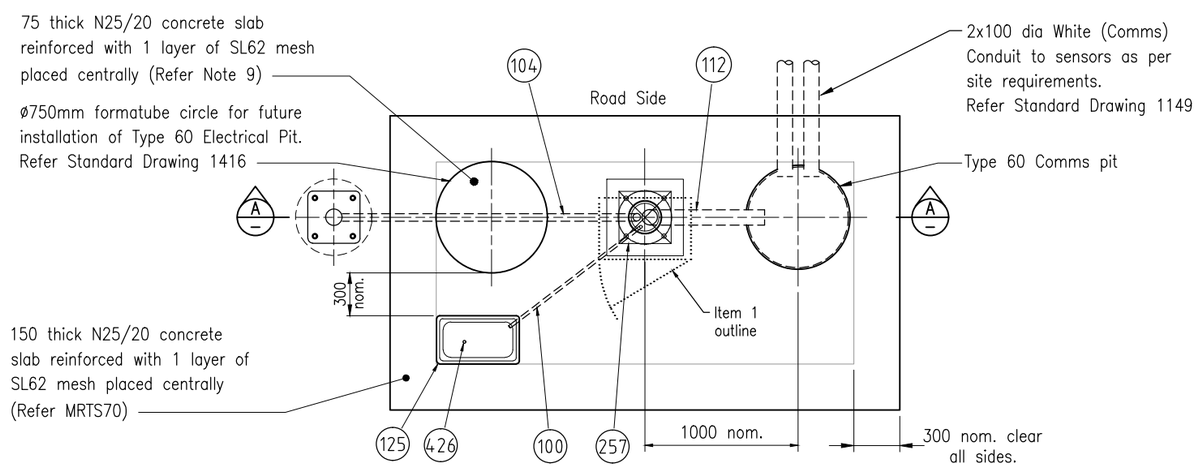

TYPICAL SLAB LAYOUT

INSTALLATION OF CONDUITS AND PITS IS THE RESPONSIBILITY OF THE LICENSED ELECTRICAL CONTRACTOR

Department of Transport and Main Roads

ITS

VEHICLE CLASSIFIER CABINET INSTALLATION SOLAR POWERED

Queensland Government

© The State of Queensland (Department of Transport and Main Roads) 2023 https://creativecommons.org/licenses/by/4.0/

A3 | Not to Scale

Standard Drawing No 1924

Date 3/2023

A | B