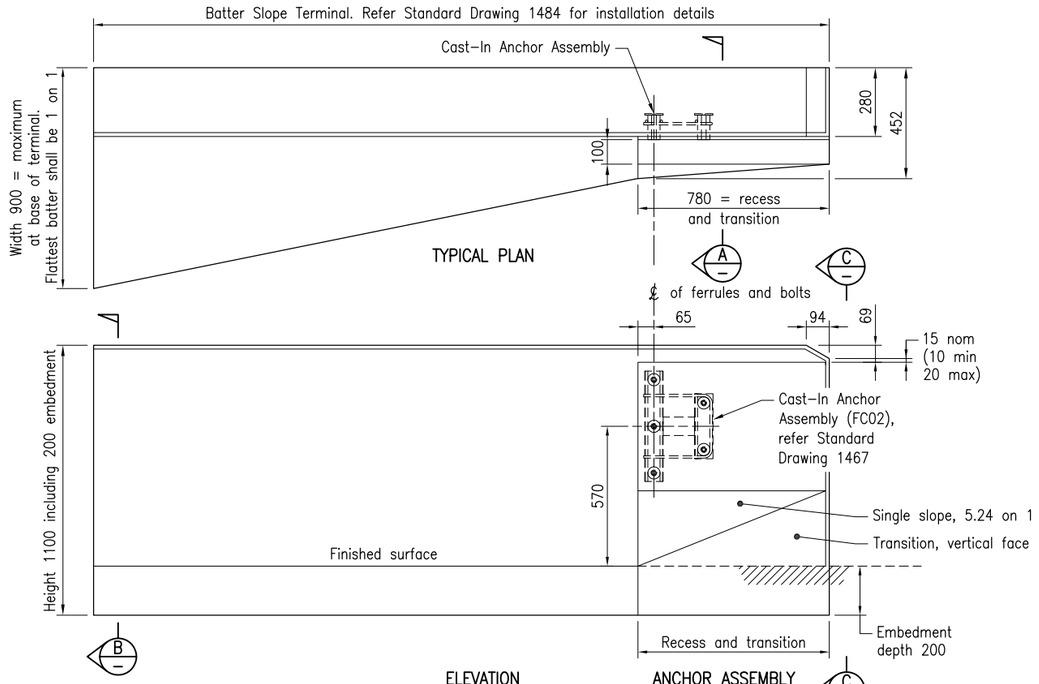

GENERAL ARRANGEMENT OF TERMINAL

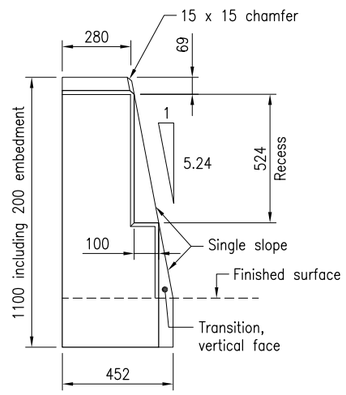

VIEW C PROFILE OF TERMINAL AT CONNECTION END

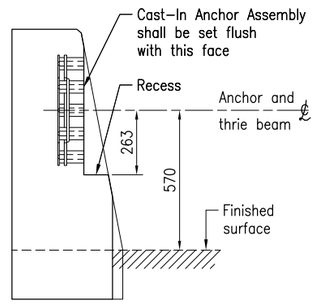

SECTION A PROFILE AT CAST-IN ANCHOR

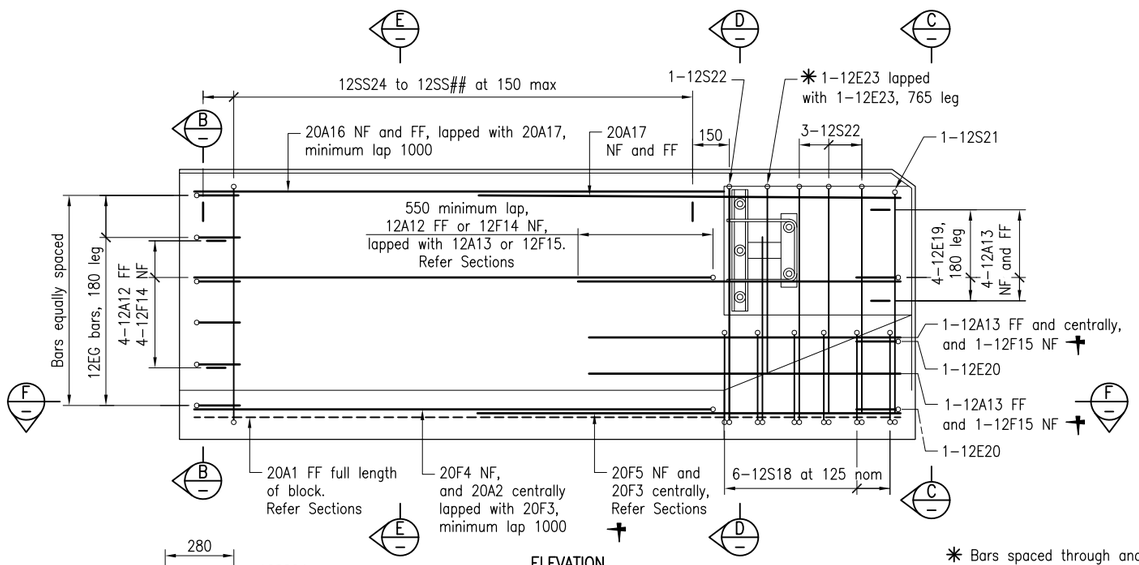

TYPICAL REINFORCEMENT

✳ Bars spaced through anchor assembly as shown. 550 lap minimum.

✝ A bars may be used in place of lapped F bars

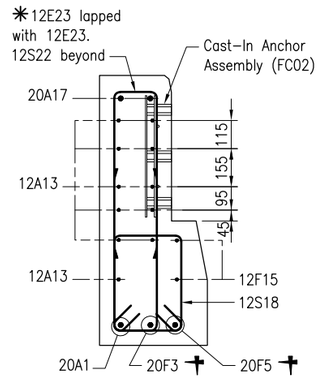

SECTION D REINFORCEMENT AT ANCHOR ASSEMBLY

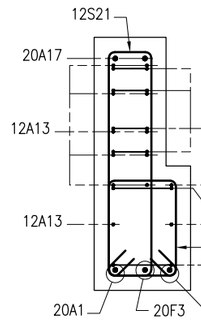

VIEW C REINFORCEMENT AT CONNECTION END

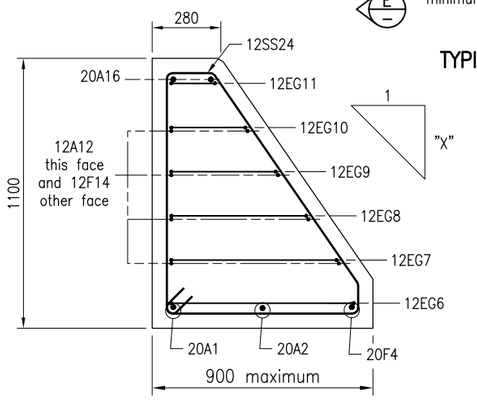

SECTION B BATTER SLOPE END

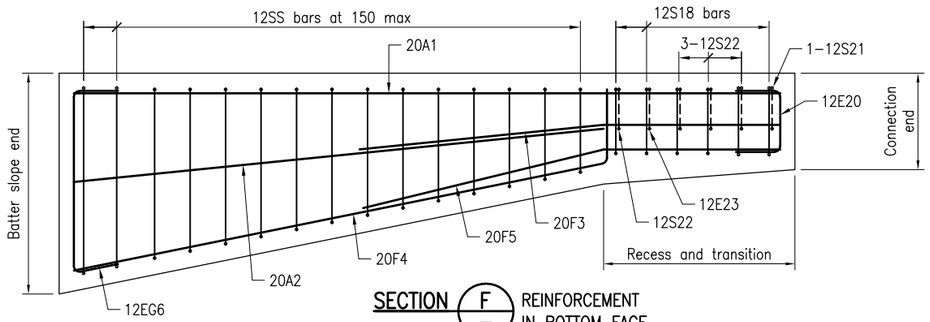

SECTION F REINFORCEMENT IN BOTTOM FACE

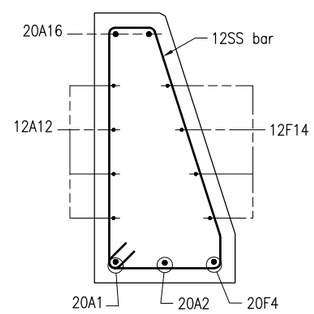

SECTION E REINFORCEMENT AT MID BLOCK

NOTES:

1. SCOPE: This Standard Drawing provides the concrete and reinforcing steel details for the batter slope concrete terminal block.
2. CONCRETE TERMINAL shall be constructed in accordance with MRTS14.
3. CONCRETE shall be in accordance with MRTS70.
   Concrete S40/20.
   Exposure classification B2 in accordance with AS 3600.
   Minimum cover to reinforcement shall be 45.
   All exposed edges shall have 15 x 15 chamfers, unless shown otherwise.
4. REINFORCING STEEL shall be read in conjunction with Standard Drawings 1043 and 1044. Reinforcing steel material shall be in accordance with MRTS71 and AS/NZS 4671.
   Deformed bars Grade D500N.
   Tack welding to reinforcement for location purposes shall be in accordance with Standard Drawing 1044.
5. DELINEATORS, where required, shall be fixed to the terminal in accordance with Standard Drawing 1468.
6. DIMENSIONS are in millimetres.

REFERENCED DOCUMENTS:

Departmental Standard Drawings:

- 1043 Reinforcing Steel – Standard Bar Shapes
- 1044 Reinforcing Steel – Lap Lengths
- 1484 Steel Beam Guardrail – Batter Slope Terminals – 1 on 1 and Steeper – General Arrangement and Installation Details

Departmental Specifications:

- MRTS14 Road Furniture
- MRTS70 Concrete
- MRTS71 Reinforcing Steel

Department of Transport and Main Roads	Queensland Government	© The State of Queensland (Department of Transport and Main Roads) 2020 http://creativecommons.org/licenses/by/4.0/au
STEEL BEAM GUARDRAIL		
BATTER SLOPE TERMINALS 1 ON 1 AND STEEPER – CONCRETE TERMINAL BLOCK	A3 Not to Scale	Standard Drawing No 1485 Date 7/2020
	A B	