## SEQUENCE OF INSTALLATION:

1. Locate pole position relative to the roadway after check for services and determine crossfall.
2. Dig/bore and excavate hole.
3. Determine finished surface level and suspend anchor bar cage in correct position relative to the finished surface level.
4. Threads to be protected and conduit plugged before pouring concrete.
5. Pour concrete footing to within 150 of top of anchor bar cage and allow to set.
6. Locate pole 60mm above finished footing level. Ensure compressible fibre washers are in place.
7. Level pole, finger tighten M24 high strength fixing nut and M24 high strength temporary nut on each threaded bar on base plate.
8. Form mortar pad under base plate using one of the following methods. Mix and apply mortar in accordance with manufacturer's specifications. Mortar pad edges bevelled as shown.
   - (a) Pack Parchem Conbextra HES mortar or approved equivalent in place. Mortar mix to be in plastic consistency, or
   - (b) Pour Pachem Conbextra HES grout or approved equivalent in place. Grout mix to be in flowable consistency.
9. Wait until mortar has achieved final set in accordance with manufacturer's specifications before tensioning nuts.
10. Remove temporary nuts from top of base plate.
11. Tension the remaining nuts to 135 Nm minimum.

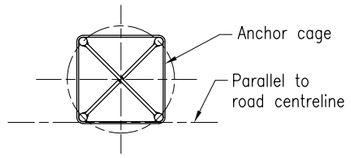


## ANCHOR CAGE ORIENTATION

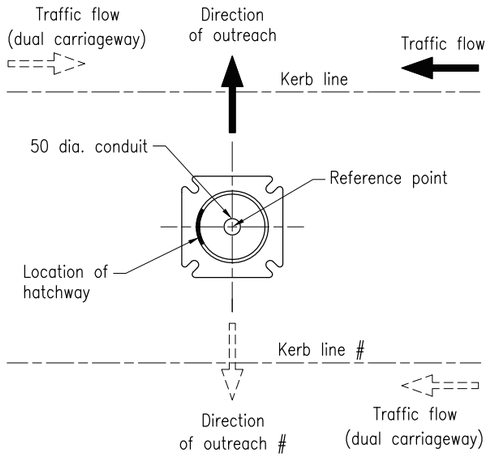


## BASE PLATE ORIENTATION

# For dual outreach only

| FOOTING DETAILS | | | | | | |
|---|---|---|---|---|---|---|
| Pole Height (excludes outreach) | Minimum Depth of Footing (D) | | Minimum Diameter of footing (W) | Bar Length | | Bar Size |
| | Av. Good Soil | Poor Soil Refer Note 3 | | Av. Good Soil | Poor Soil Refer Note 3 | |
| 7000 | Specialist Design Required | | 600 | Specialist Design Required | | Specialist design required. Drawing is based on 4 x 28 dia. bars |
| 8500 | | | 600 | | | |
| 10000 | | | 600 | | | |
| 13000 | | | 700 | | | |

NOTE: A specialist footing design shall also apply for road lighting poles on a verge/shoulder within the following horizontal distances from the batter hinge point:
- 3.0m for poles with a 600mm dia. footing.
- 3.5m for poles with a 700mm dia. footing.

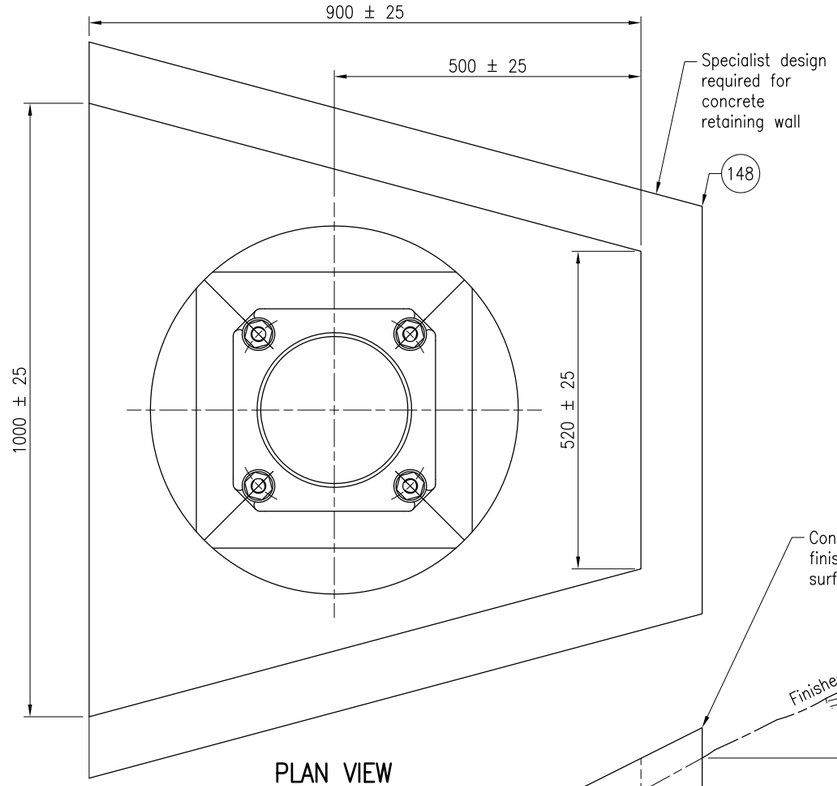


## PLAN VIEW

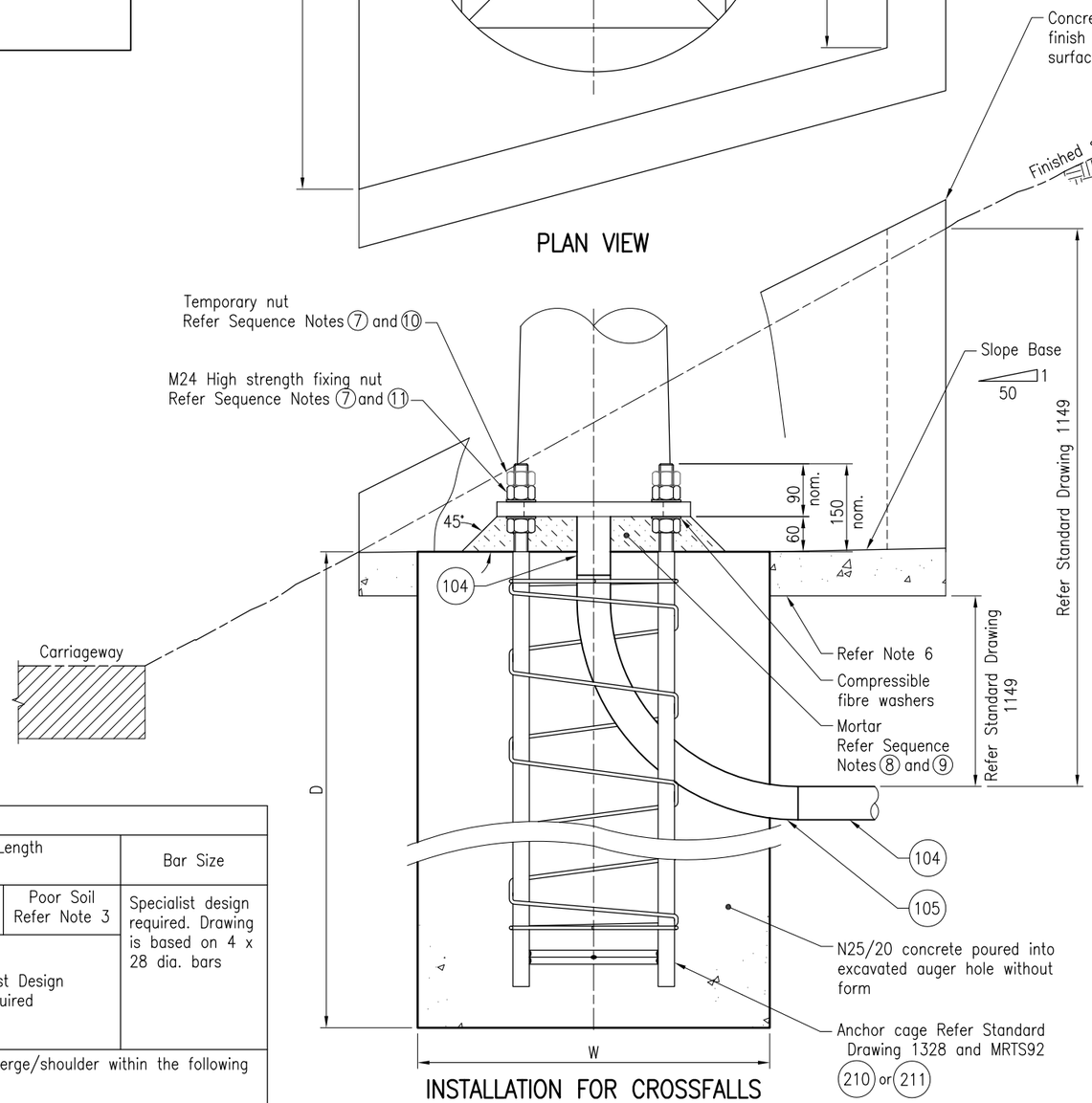


## INSTALLATION FOR CROSSFALLS GREATER THAN 1:2

## NOTES:

1. Formwork to be provided for top 150 of footings in collapsing soils.
2. A seven day minimum curing period must be allowed for concrete pole bases before fixing poles.
3. Poor soil consists of any of the following: Soft clay, loose sand and soft sand/clay mixes.
4. This installation has been designed to withstand wind conditions as defined in MRTS94.
5. This diagram shows dual carriageway, however only one carriageway may be present.
6. Concrete base required to prevent leaching of soil around column footing. (min. thickness 75).
7. Ensure conduit is not blocked.
8. Dimensions are in millimetres unless shown otherwise.

The purpose of this drawing is to provide typical standard details. The fitness for purpose of this drawing for a specific project shall be determined and certified by an RPEQ Engineer. Additional project specific details may be required to be included in the scheme drawings.

INSTALLATION OF CONDUITS AND PITS IS THE RESPONSIBILITY OF THE LICENSED ELECTRICAL CONTRACTOR

ASSOCIATED DEPARTMENTAL DOCUMENTS:
- Standard Drawings
- Specifications

REFERENCED DOCUMENTS:

Departmental Standard Drawings:
- 1149 Traffic Signals/Road Lighting/ITS – Installation of Underground Electrical and Communications Conduit
- 1328 Road Lighting/ITS/Camera Pole – Anchor Cage Fabrication Details
- 1399 Road Lighting – Base Plate Mounted Pole Wiring Details
- 1680 Traffic Signals/Road Lighting – Extension to Light Pole and Mast Arm Anchor Cages
- 1699 Traffic Signals/Road Lighting/ITS – Parts List

Departmental Specifications:
- MRTS70 Concrete
- MRTS72 Manufacture of Precast Concrete Elements
- MRTS91 Conduits and Pits
- MRTS92 Traffic Signal and Road Lighting Footings
- MRTS94 Road Lighting
- MRTS72 Manufacture of Precast Concrete Elements

Australian Standards:
- AS 1275 Metric screw threads for fasteners

Department of Transport and Main Roads

ROAD LIGHTING

BASE PLATE MOUNTED POLE AND FOOTING INSTALLATION DETAILS FOR CROSSFALLS GREATER THAN 1:2

Queensland Government

© The State of Queensland (Department of Transport and Main Roads) 2018 http://creativecommons.org/licences/by/3.0/au

A3 Not to Scale

Standard Drawing No 1393

Date 7/18

G H